Consumables Catalogue



Converting Machinery Cevenini Srl.
Via del Lavoro 18
20863 Concorezzo (MB) – ITALY
Tel. +39 0396042569
info@cmccevenini.it

CMC Cevenini USA LLC
7602 ENERGY PARKWAY, SUITE 4
CURTIS BAY, MD 21226
PHONE (443) 817-2767
FAX (443) 817-2651
info@cmcceveniniusa.com

CMC Cevenini UK
87 Alston Drive
Bradwell Abbrey, Milton Keynes
Buckinghamshire MK13 9HF - UK
Tel. +44 01908 615508
info@cmccevenini.co.uk

MARKET LEADER IN LOG SLITTING MACHINES
ALWAYS AHEAD IN INNOVATION

RELEASE 11/2024

Index

Description	Pag.
Index	1
Mandrel cutting sleeves	2
Circular blades	6
Saw cutting blades	14
Plastic cutting strip	15
Slitting lubricant	16
Oil for the automatic lubrication	18
Grinding wheels	19
Machine equipment parts	20



Mandrel Cutting Sleeves

The rubber cutting sleeves offered from CMC CEVENINI to its clients are the result of many years spent on investing, researching and developing the most suitable solution to satisfy clients demand to obtain the best possible cutting result. Then each sleeve is marked with its Ø ref. in order not to make a mistake when using it on the log slitting machine.
Moreover the CMC CEVENINI cutting sleeves provide a cost effective tool against waste as the elasticity of the rubber helps hold the sleeve together for longer. Two grades are available, PROFESSIONAL and STANDARD, thus giving even more versatility and savings to your company.

Professional Grade

Lenght 100mm

Code	Description	Ø ins.(mm)	Ø out.(mm)	Length (mm)
10MC69-100	Rubber sleeve Professional Grade	63	69	100
10MC70-100	Rubber sleeve Professional Grade	63	70	100
10MC76.5-100	Rubber sleeve Professional Grade	63	76.5	100
10MC77-100	Rubber sleeve Professional Grade	63	77	100

Professional Grade

Lenght 260mm

Code	Description	Ø i s.(mm)	Ø out.(mm)	Length (mm)
10MC31-260	Rubber sleeve Professional Grade	25	31	260
10MC32.2-260	Rubber sleeve Professional Grade	25	32,2	260
10MC36-260	Rubber sleeve Professional Grade	30	36	260
10MC37-260	Rubber sleeve Professional Grade	30	37	260
10MC38-260	Rubber sleeve Professional Grade	30	38	260
10MC38.5-260	Rubber sleeve Professional Grade	30	38,5	260
10MC39-260	Rubber sleeve Professional Grade	30	39	260
10MC39.5-260	Rubber sleeve Professional Grade	30	39,5	260
10MC39.8-495	Rubber sleeve Professional Grade	39,8	49,5	260
10MC39.8-50	Rubber sleeve Professional Grade	39,8	50	260
10MC49-260	Rubber sleeve Professional Grade	30	49	260
10MC50-260	Rubber sleeve Professional Grade	30	50	260



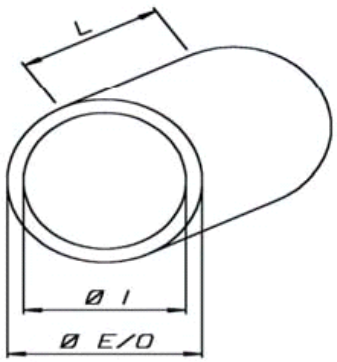

Mandrel Cutting Sleeves

Professional Grade

Lenght 400mm

Code	Description	Ø i s.(mm)	Ø out.(mm)	length(mm)
10MC74-400	Rubber sleeve Professional Grade	63	74	400
10MC74.3-400	Rubber sleeve Professional Grade	63	74,3	400
10MC75-400	Rubber sleeve Professional Grade	63	75	400
10MC75.5-400	Rubber sleeve Professional Grade	63	75,5	400
10MC76-400	Rubber sleeve Professional Grade	63	76	400
10MC76.4-400	Rubber sleeve Professional Grade	63	76.4	400

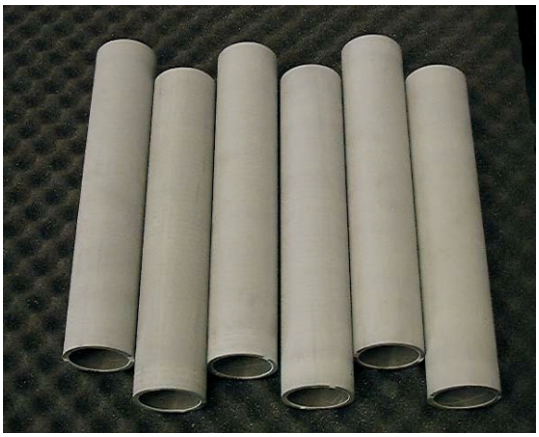

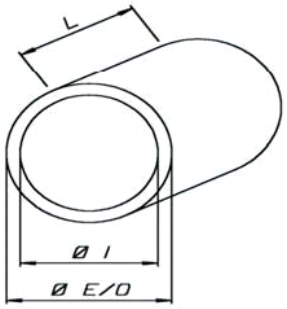

Standard Grade

Lenght 400mm

Code	Description	Ø i s.(mm)	Ø out.(mm)	length(mm)
10MC74.3-400E	Rubber sleeve Standard Grade	63	74,3	400
10MC75-400E	Rubber sleeve Standard Grade	63	75	400
10MC75.5-400E	Rubber sleeve Standard Grade	63	75,5	400
10MC76-400E	Rubber sleeve Standard Grade	63	76	400



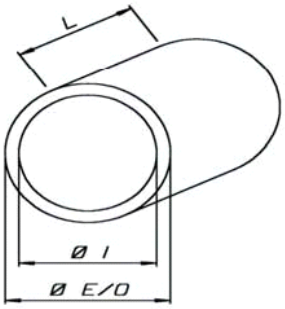

NOTE: Contact CMC CEVENINI Customer Care Service for other sleeves dimensions.

Mandrel Cutting Sleeves

150mm Long Cutting Contrast Sleeves For Mandrels Having Expansion Near The Chuck.

Contrast sleeves made with softer compound allowing to get a deformation and expansion of them, blocking form the inside of the core the material near the chuck.

Code	Description	Ø ins.(m)	Ø out.(m)	length(mm)
10MC37-150ST	Rubber sleeve Professional Grade	30	37	150
10MC37.5-150ST	Rubber sleeve Professional Grade	30	37,5	150
10MC38-150ST	Rubber sleeve Professional Grade	30	38	150
10MC39-150ST	Rubber sleeve Professional Grade	30	39	150
10MC47-150ST	Rubber sleeve Professional Grade	39.8	47	150
10MC48-150ST	Rubber sleeve Professional Grade	39,8	48	150
10MC49-150ST	Rubber sleeve Professional Grade	39.8	49	150
10MC57-150ST	Rubber sleeve Professional Grade	39.8	57	150
10MC73-150ST	Rubber sleeve Professional Grade	63	73	150
10MC74-150ST	Rubber sleeve Professional Grade	63	74	150
10MC75-150ST	Rubber sleeve Professional Grade	63	75	150
10MC76-150ST	Rubber sleeve Professional Grade	63	76	150



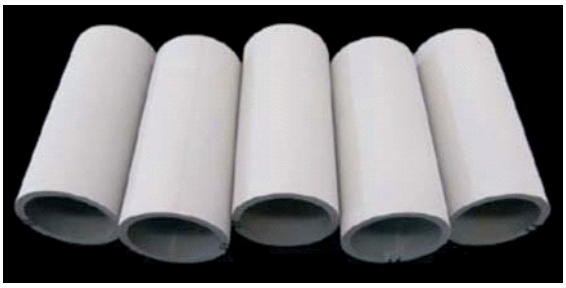

NOTE: Contact CMC CEVENINI Customer Care Service for other sleeves dimensions.

200mm Long Cutting Contrast Sleeves For Mandrels Having Expansion Near The Chuck.

Contrast sleeves made with softer compound allowing to get a deformation and expansion of them, blocking form the inside of the core the material near the chuck.

Code	Description	Ø ins.(mm)	Ø out.(mm)	length(mm)
10MC75-200ST	Rubber sleeve Professional Grade	63	75	200
10MC76-200ST	Rubber sleeve Professional Grade	63	76	200

NOTE: Contact CMC CEVENINI Customer Care Service for other sleeves dimensions.

Plastic sleeve for cutting contrast

The sleeves made with plastic material, with a smooth surface, are suitable for the logs during loading and the rolls during unloading to slide easily. The sleeves are sold in one piece that cover the whole length of work equal to 1650mm and it has to be placed next to the contrast sleeve for expansion near the chuck. After some used the surface can be smoothed down using a sand paper.

Code	Description	Ø ins.(mm)	Ø out.(mm)	length(mm)
10MC-CO.T016	PLASTIC SLEEVE	63	75	1650



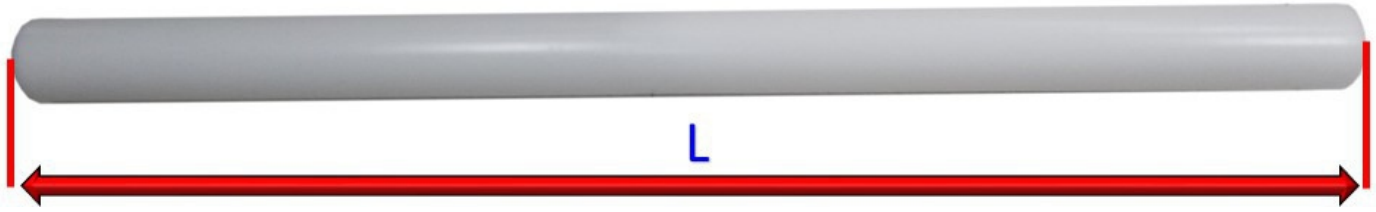

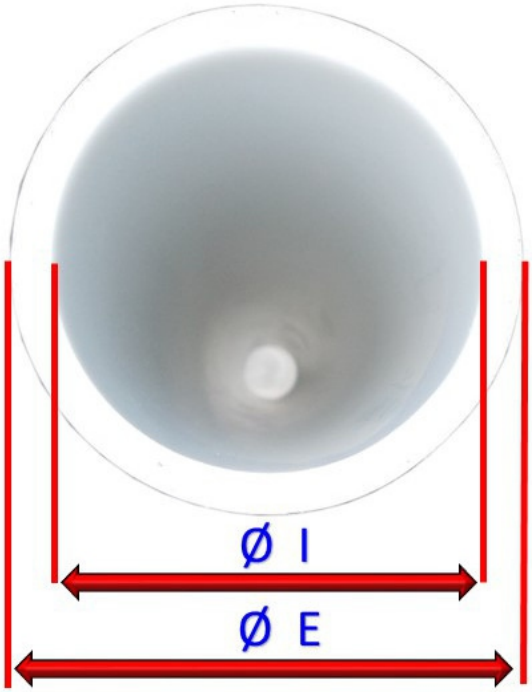

Circular Blades

Today CMC CEVENINI can proposes to its clients a higher quality circular blades.
Particular attention is dedicated to the quality control. Inspections are done at CMC CEVENINI twice on each blade before shipping it out to its final destination.
This dual control is done to test: steel hardness, planarity tolerance, run/out, profile and bevel.
Moreover each blade comes with its own production and test identification code.
CMC CEVENINI proposes different versions and steels types of its circular blades.
Thanks to its great slitting experience and in order to cut all kind of materials in the best way, CMC CEVENINI has created 3 different blade profiles: **F** and **B** and **V**.

Ø200 ÷ ø400 = HSS
Ø300 ÷ ø920 = D2
Ø170 ÷ ø730 = CV

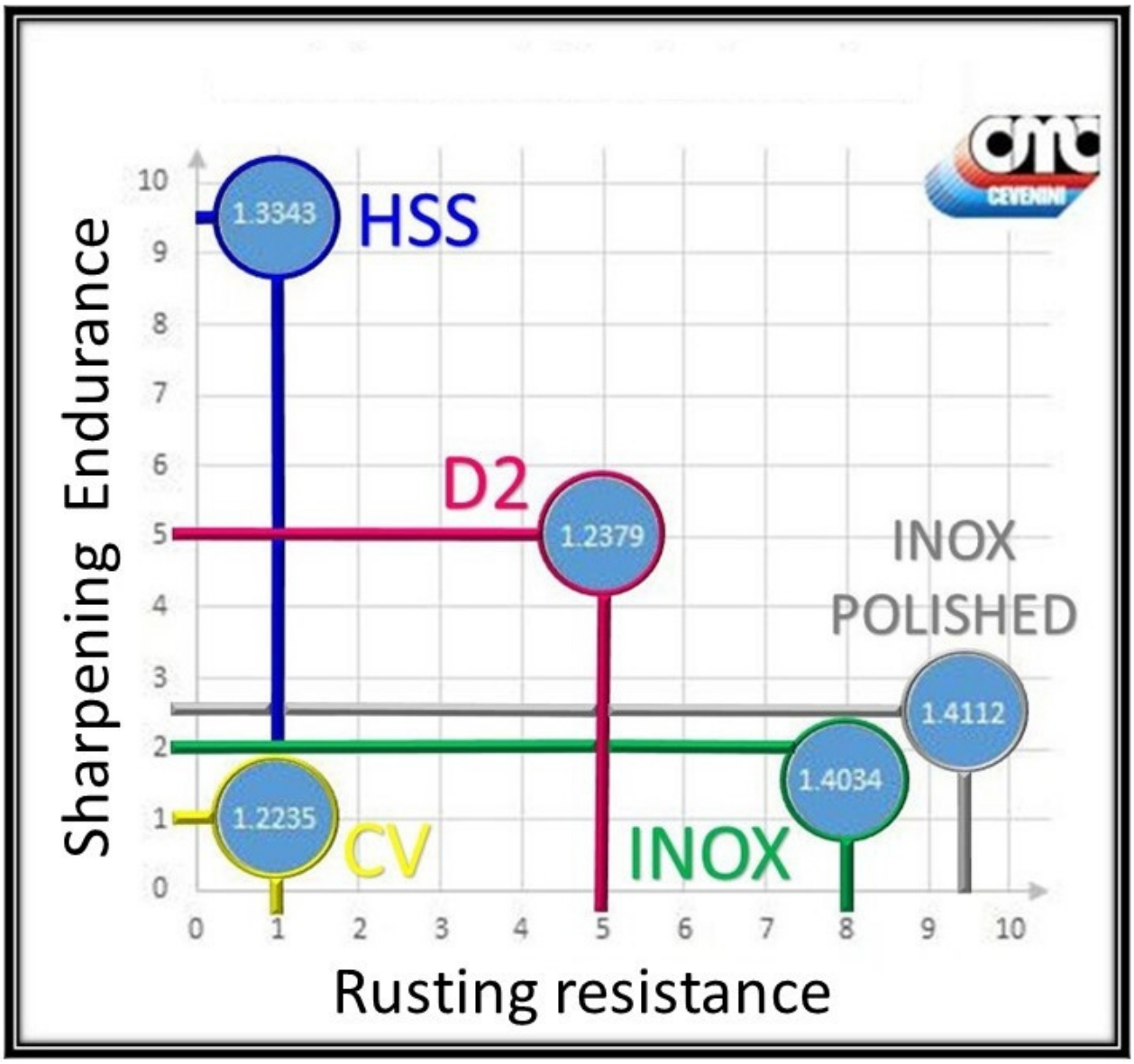

Circular Blades

BLADE PROFILE " F "

CV

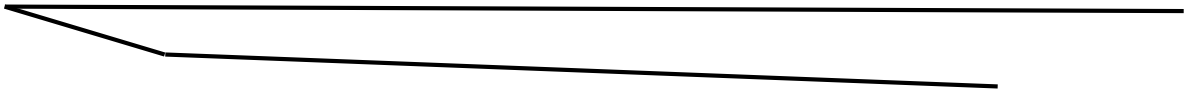

The **F** profile is particularly suitable to cut foam tapes and any other soft materials like textiles. Sometimes it is also indicated to cut narrow widths (from 2mm to max. 9mm) of technical, packaging and consumables tapes for small outside Ø logs.

Code	Description	Ø hole/ shaft (mm)	Ø out.(mm)
10LM220F32	Circular Blade "F" Profile	32	220
10LM250F32	Circular Blade "F" Profile	32	250
10LM300F32	Circular Blade "F" Profile	32	300
10LM300F70	Circular Blade "F" Profile	70	300
10LM360F70	Circular Blade "F" Profile	70	360
10LM400F70	Circular Blade "F" Profile	70	400
10LM450F70	Circular Blade "F" Profile	70	450
10LM470F70	Circular Blade "F" Profile	70	470
10LM500F70	Circular Blade "F" Profile	70	500
10LM600F70	Circular Blade "F" Profile	70	600
10LM700F70	Circular Blade "F" Profile	70	700
10LM730F70	Circular Blade "F" Profile	70	730

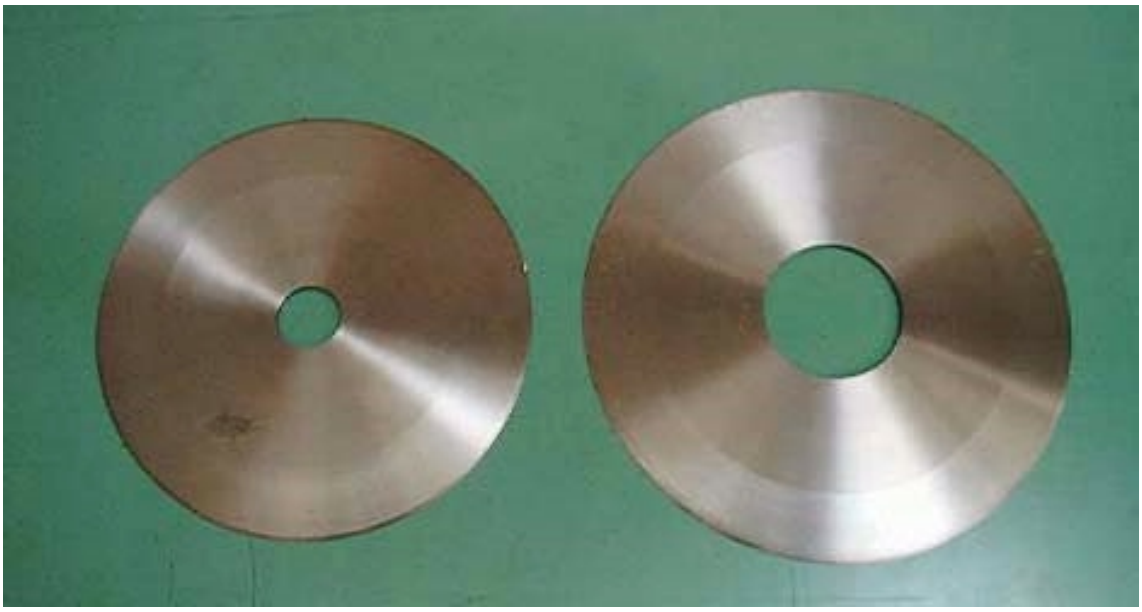

Note: All blades can be customized with different angle profile and central driving groove.

Circular Blades

BLADE PROFILE " F "

D2

The **F** profile is particularly suitable to cut foam tapes and any other soft materials like textiles. Sometimes it is also indicated to cut narrow widths (from 2mm to max. 9mm) of technical, packaging and consumables tapes for small outside Ø logs.

Code	Description	Ø hole/ shaft (mm)	Ø out.(mm)
10LMD2-300F70	Circular Blade "F" Profile	70	300
10LMD2-360F70	Circular Blade "F" Profile	70	360
10LMD2-400F70	Circular Blade "F" Profile	70	400
10LMD2-450F70	Circular Blade "F" Profile	70	450
10LMD2-470F70	Circular Blade "F" Profile	70	470
10LMD2-500F70	Circular Blade "F" Profile	70	500
10LMD2-520F70	Circular Blade "F" Profile	70	520
10LMD2-550F70	Circular Blade "F" Profile	70	550
10LMD2-600F70	Circular Blade "F" Profile	70	600
10LMD2-700F70	Circular Blade "F" Profile	70	700
10LMD2-730F70	Circular Blade "F" Profile	70	730
10LMD2-920F70	Circular Blade "F" Profile	70	920

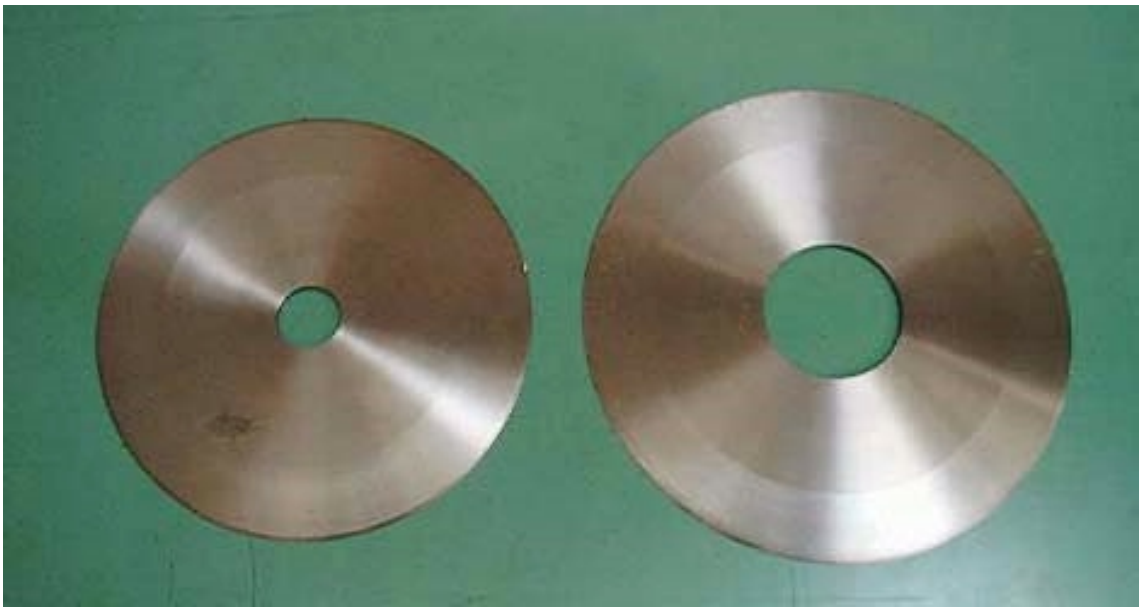

Note: All blades can be customized with different angle profile and central driving groove.

Circular Blades

BLADE PROFILE " F "

HSS

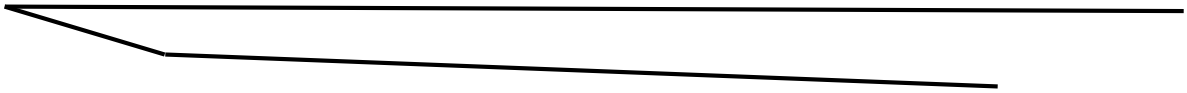

The **F** profile is particularly suitable to cut foam tapes and any other soft materials like textiles. Sometimes it is also indicated to cut narrow widths (from 2mm to max. 9mm) of technical, packaging and consumables tapes for small outside Ø logs.

Code	Description	Ø hole/ shaft (mm)	Ø out.(mm)
10LMSR220F32	Circular Blade "F" Profile	32	220
10LMSR250F32	Circular Blade "F" Profile	32	250
10LMSR300F32	Circular Blade "F" Profile	32	300
10LMSR300F70	Circular Blade "F" Profile	70	300
10LMSR360F70	Circular Blade "F" Profile	70	360
10LMSR400F70	Circular Blade "F" Profile	70	400

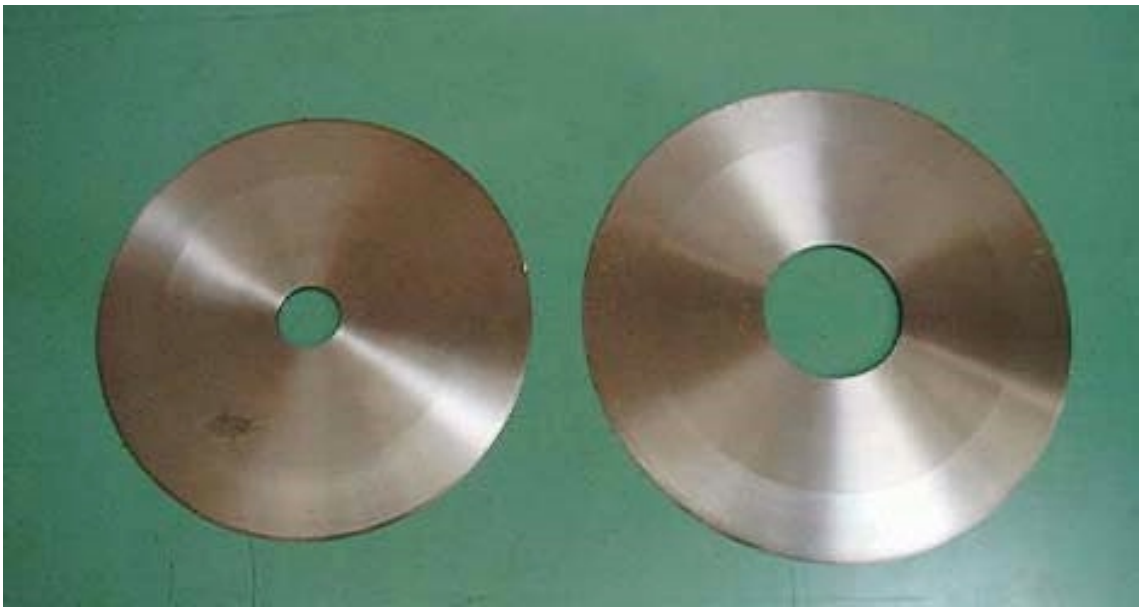

Note: All blades can be customized with different angle profile and central driving groove.

Circular Blades

BLADE PROFILE " B "

CV

The **B** profile is particularly suitable to cut logs of tight rewound materials. Also indicated to cut mid to large widths of all technical, packaging and consumables tapes as well as all kind of hard rock tight rewound products. Suitable for soft PVC electrical insulating tapes and vinyl tapes too.

Code	Description	Ø hole/ shaft (mm)	Ø out.(mm)
10LM200B32	Circular Blade "B" Profile	32	200
10LM220B32	Circular Blade "B" Profile	32	220
10LM250B32	Circular Blade "B" Profile	32	250
10LM250B70	Circular Blade "B" Profile	70	250
10LM300B32	Circular Blade "B" Profile	32	300
10LM300B70	Circular Blade "B" Profile	70	300
10LM360B70	Circular Blade "B" Profile	70	360
10LM400B70	Circular Blade "B" Profile	70	400
10LM450B70	Circular Blade "B" Profile	70	450
10LM470B70	Circular Blade "B" Profile	70	470
10LM500B70	Circular Blade "B" Profile	70	500
10LM600B70	Circular Blade "B" Profile	70	600
10LM700B70	Circular Blade "B" Profile	70	700
10LM730B70	Circular Blade "B" Profile	70	730
10LM400B70SP8	Circular Blade "B" Profile extra thick	70	400
10LM470B70SP8	Circular Blade "B" Profile extra thick	70	470

Note: All blades can be customized with different angle profile and central driving groove.

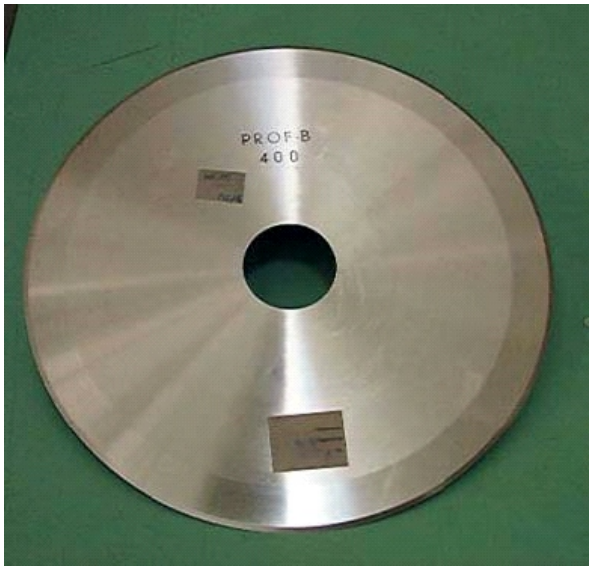

Circular Blades

BLADE PROFILE " B "

D2

The **B** profile is particularly suitable to cut logs of tight rewound materials. Also indicated to cut mid to large widths of all technical, packaging and consumables tapes as well as all kind of hard rock tight rewound products. Suitable for soft PVC electrical insulating tapes and vinyl tapes too.

Code	Description	Ø hole/ shaft (mm)	Ø out.(mm)
10LMD2-300B70	Circular Blade "B" Profile	70	300
10LMD2-360B70	Circular Blade "B" Profile	70	360
10LMD2-400B70	Circular Blade "B" Profile	70	400
10LMD2-450B70	Circular Blade "B" Profile	70	450
10LMD2-470B70	Circular Blade "B" Profile	70	470
10LMD2-500B70	Circular Blade "B" Profile	70	500
10LMD2-550B70	Circular Blade "B" Profile	70	550
10LMD2-700B70	Circular Blade "B" Profile	70	700
10LMD2-920B70	Circular Blade "B" Profile	70	920

Note: All blades can be customized with different angle profile and central driving groove.

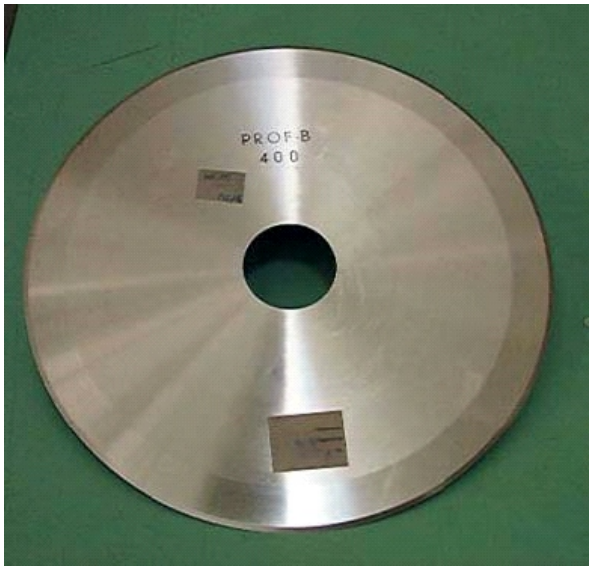

Circular Blades

BLADE PROFILE " B "

HSS



The **B** profile is particularly suitable to cut logs of tight rewound materials. Also indicated to cut mid to large widths of all technical, packaging and consumables tapes as well as all kind of hard rock tight rewound products. Suitable for soft PVC electrical insulating tapes and vinyl tapes too.

Code	Description	Ø hole/ shaft (mm)	Ø out.(mm)
10LMSR200B32	Circular Blade "B" Profile	32	200
10LMSR220B32	Circular Blade "B" Profile	32	220
10LMSR250B32	Circular Blade "B" Profile	32	250
10LMSR300B32	Circular Blade "B" Profile	32	300
10LMSR300B70	Circular Blade "B" Profile	70	300
10LMSR360B70	Circular Blade "B" Profile	70	360
10LMSR400B70	Circular Blade "B" Profile	70	400

Note: All blades can be customized with different angle profile and central driving groove.

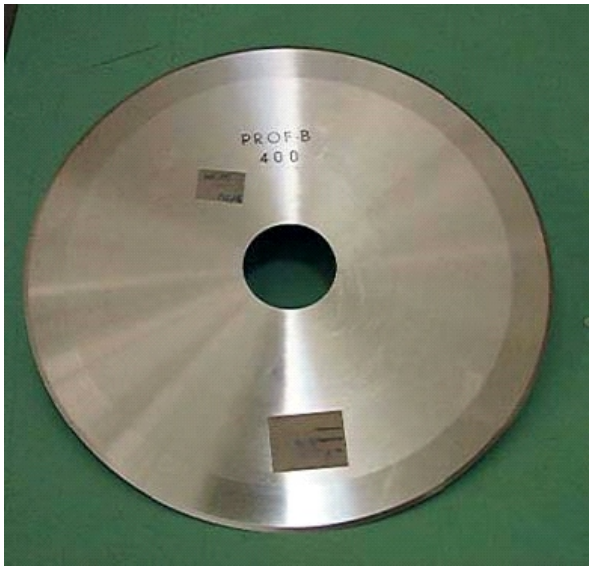

Circular Blades

BLADE PROFILE " V "

CV



The **V** profile is particularly suitable to cut logs of very tight rock hard materials maintaining consistent wide cut widths.
This profile is indicated for certain types of low tack protective tapes using small outside Ø log rolls.

Code	Description	Ø hole/ shaft (mm)	Ø out.(mm)
10LM250V32	Circular Blade "V" Profile	32	250
10LM250V70	Circular Blade "V" Profile	70	250
10LM300V32	Circular Blade "V" Profile	32	300
10LM300V70	Circular Blade "V" Profile	70	300
10LM360V70	Circular Blade "V" Profile	70	360
10LM400V70	Circular Blade "V" Profile	70	400
10LM450V70	Circular Blade "V" Profile	70	450

Note: All blades can be customized with different angle profile and central driving groove.

Special Blade Packaging

Required due to safe carriage of blades during transit under health and safety in the work place regulations.

Code	Description
14SCAT/300	Wooden carriage box
14SCAT/380	Wooden carriage box
14SCAT/520	Wooden carriage box
14IMBLAME600	Wooden carriage box
14IMBLAME730	Wooden carriage box



Saw Cutting Blades

After a long period dedicated to the research on the market of the best saw blades and after testing several types on CMC CEVENINI Log Slitting Machines, CMC CEVENINI is proud to include in its wide range of consumables different kind of saw blades too. These special blades have been developed to cut logs of hard materials such as surface protection film, polyester, PVC, paper and similar products. As usual, at CMC CEVENINI, particular attention has been given to the choice of the best possible result taking into consideration both the saw blade teeth number and the saw blade profile according to the material being cut.

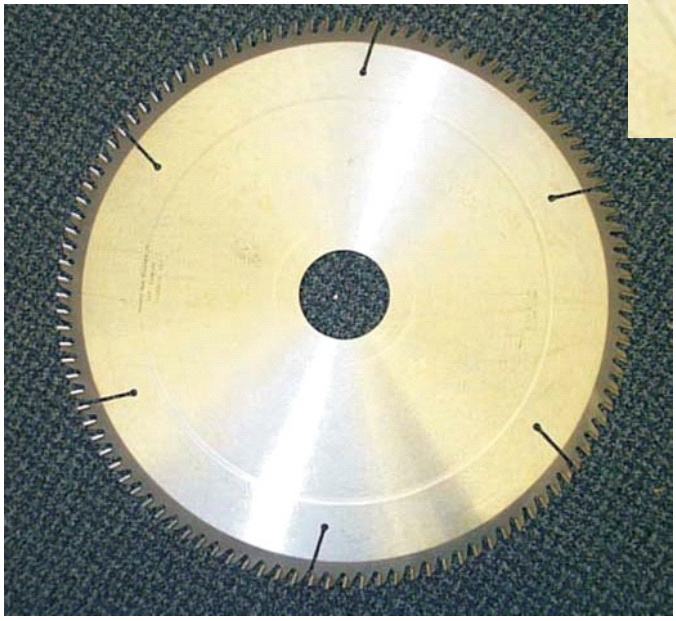

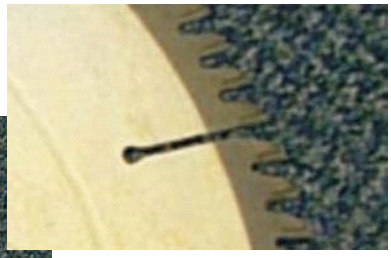



Code	Description	Ø hole/ shaft (mm)	Ø out.(mm) cutting teeth
10F300Z72DS	Saw Blade	70	300
10F350Z56DS	Saw Blade	70	350
10F450Z108DP	Saw Blade	70	450
10F450Z54DS	Saw Blade	70	450
10F450Z108DS	Saw Blade	70	450
10F450Z96DP-DT-NEG	Saw Blade	70	450
10F500Z96DP-DT-NEG	Saw Blade	70	500
10F500Z128DS	Saw Blade	70	500
10F600Z56DS	Saw Blade	70	600
10F800Z112DA	Saw Blade	70	800
10F800Z112DASP8	Saw Blade	70	800

Plastic disposable cutting strip

Protecting the mandrel and enabling the cleanest of cuts the **plastic disposable strip** provides the perfect tool for fixed mandrels and saw cutting mandrel operation. Both material and strips profile are the result of continuous research to get the best quality. Each piece is carefully checked before it is ship it out from the CMC CEVENINI factory to reach its final destination.

Saw Blade Disposable Cutting Strips

Code	Description
10PROF-H10MM	Saw Plastic strip – 10mm thick – length: 2000mm.
10PROF-H12MM	Saw Plastic strip – 12mm thick – length: 2000mm.
10PROF-H14MM	Saw Plastic strip – 14mm thick – length: 2000mm.

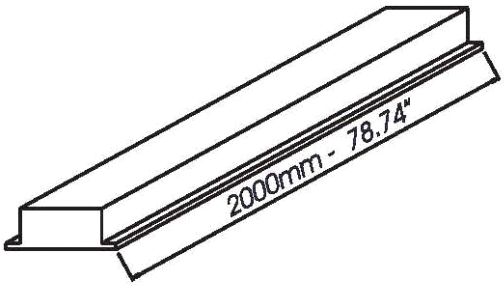

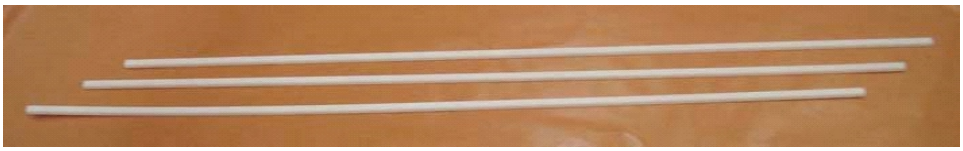

Fixed (Non/Rotating) Mandrel Cutting Strips

Code	Description
10SCTMF15	H=15mm Cutting Strip for Ø 25mm (1") and 32mm (1¼") mandrel, length = 1800mm.
10SCTMF18	H=18mm Cutting Strip for Ø 38mm (1½") and 52mm (2") mandrel, length = 1800mm.
10SCTMF22	H=22mm Cutting Strip for Ø 76mm (3") mandrel, length = 1800mm.

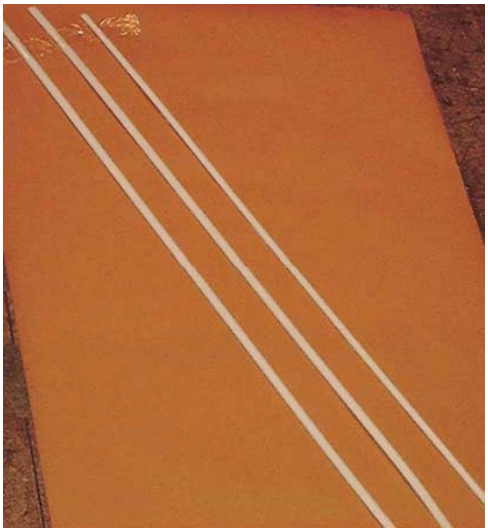

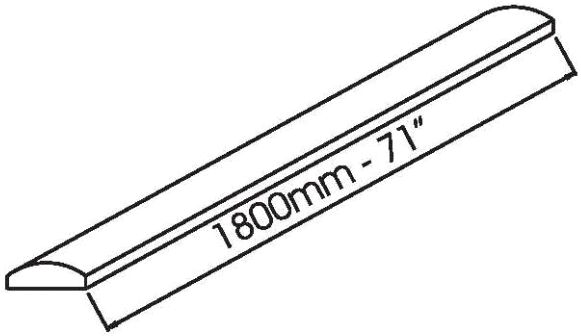

Slitting Lubricant

White AV Lubricant

We supply the **AV slitting lube** in 2 quantities: 20 litres container and 100 litres container. The product needs to be diluted with demineralized or distilled water to the following proportions: 5% AV to 95% water. As a result 1 litre of emulsion will produce 20 litres of fluid for use with your log slitting machine. In consequence a 20 litres tank will mix to 400 litres of finished product and a 100 litres drum will mix to 2000 litres of finished product. This makes the lubricant a cost effective solution.

Code	Description
10LLSAV20	20 lt. container of AV lubricant for blades
10LLSAV100	100 lt. drum of AV lubricant for blades
10LLSAV1000	1000 lt. tank of AV lubricant for blades

Silicon –Free Lubricant

This lubricant is suggested to be used in process where the cutting material cannot be in contact with silicone. It is a convenient alternative to reduce the overheat of the circular blade during the cutting cycle.

1lt. of GL "silicone-fee" must be dissolve in 19 lt. of water.

Code	Description
10LLGL20	20 lt. container of GL lubricant for blades
10LLGL120	120 lt. drum of GL lubricant for blades
10LLGL1000	1000 lt. tank of GL lubricant for blades

We supply the **GL slitting lube** in 2 quantities; 20 litres container and 120 litres container.The product needs to be diluited with demineralized or distilled water to the following proportions: 5% GL to 95% water. As a result 1 litre of concentrated GL will produce 20 litres of fluid for use with your log slitting machine. In consequence a 20 liters tank will mix to 400 litres of finished product and a 120 litres drum will mix up to 2400 litres of finished product. This makes the lubricant a cost effective solution.

Slitting Lubricant

The slitting blade lubricants have been developed and always improved by CMC CEVENINI in order to offer our clients the right products to get the best cutting quality without compromising the cut materials adhesive. Moreover, when shipping both products out of the CMC CEVENINI factory, CMC CEVENINI supplies to the clients a Safety Data Sheet together with the necessary operational instructions.

NOTE: While the cost of the 100 lt. plastic drum is included in the lubricant price, the cost of the 20 lt. plastic container and wooden crate, or the wooden cage for the 100lt plastic drum are not included in the price of the lubricant. The shipment charges are pay separately.



20lt. container



Wooden carriage box



100lt AV drum or 120lt GL



Wooden drum cage

Oil for the automatic lubrication

The square rails for the carriage translation and the main balls crew are lubricated automatically.

The oil chart contains the type of oil needed to use in the automatic lubrication system.

Code	Description
10LLPD	Lubricant oil for the carriage square rails



2lt plastic tank.

Some parts must be manually lubricated using the related oil pump supplied with the machine.

Code	Description
10LLPM	Lubricant oil for manual pump in 1lt plastic can



1 lt plastic can

Grinding Wheels

The correct grinding of the blade is vital for the best slitting results. Ensuring the tip angle is correct and frequency of grinding is set at regular intervals will ensure the sharpness of the blade is maintained. The type, diameter and grain are the result of an extensive research on the market among a variety of similar products. CMC CEVENINI has discovered the best quality in various which are now available in our stock. Our variety of wheels offers a selection which meets the various requests of each material to be cut.

Code	Description – dimensions (mm)	Ref. N.
10MOLA-TIPOC	Grinding wheel 100x50x20	1
10MOLA-TIPOB	Blue grinding wheel to be used for HSS blades 100x50x20	2
10MOLA-TIPOA1	Blue Grinding wheel 80x40x20	3
10MOLA-TIPOA3	Grinding wheel CBN 70x20x20.	4
10ML9736-2X5	Orange wheel for deburring unit Ø 20	5
10MOLAU-1	Emeril wheel Ø 50x12x12	6
10MOLAU-6	Hand held dress stone	7
10DIAMANTE-AU	Diamond to clean sharpening stone	8
10MOLAU-8	Stone to clean grinding wheel CBN	9
10MOLA-TIPOA2	White Grinding wheel 80x40x20	10
10MOLAU-1B	Emery wheel CBN Ø 50x12x12	11
10MOLA-TIPOM1	Grinding wheel CBN 100x50x20	12



Holding For The Hand Grinding Stone

This is a very important tool for the machine operator when grinding the blade manually. Thanks to this tool, especially designed by CMC CEVENINI, the blades can be sharpened in safety as the operator hands holding the tool are guarded from the blade.

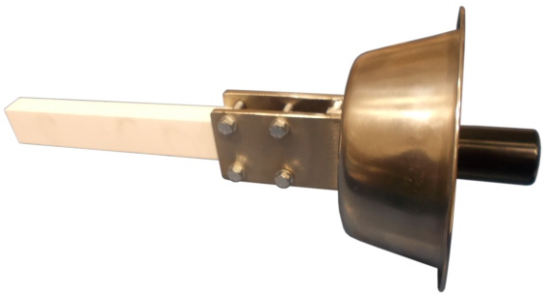

Code	Description
GR4450	Hand holder for 10MOLAU-6
GR4450-A	Hand holder for 10MOLAU-8

Holding knife to clean blade

Code	Description
GR4450-B	Protected hilt to clean the blade. Grip with a protection guard to clean the blade.

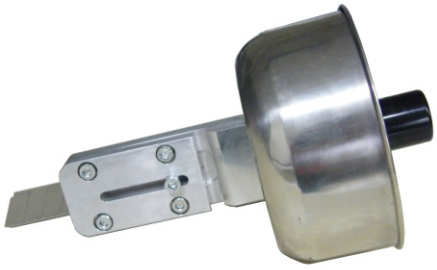

Proximity Switches

After many trials over the years with different proximity switches CMC CEVENINI has finally found these high reliability products with a low "infantile death rate" able to grant a very long life compared with the standard life of the common electronic components offered from the market.

« E » from 2012

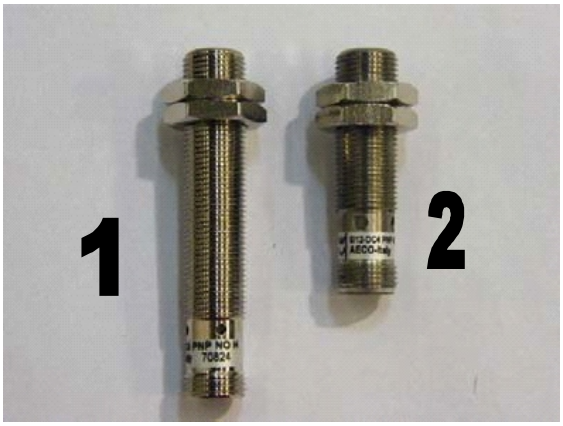



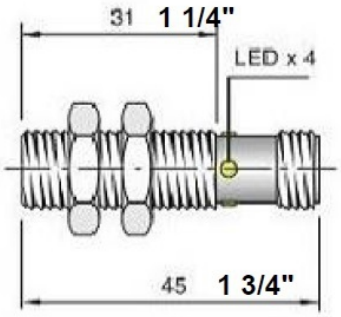

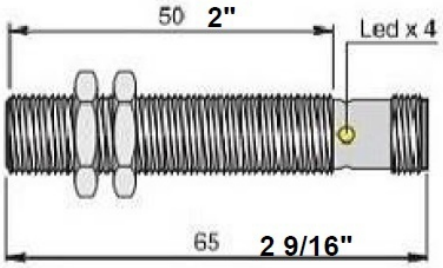



Code	Description	Ref. N.
05SI12DC4PNPNOH	Positioning proximity for carriages and chuck counter proximity	1
05SI12DC4-HS100	Blade counter proximity	2
05CONN9H	Connector	3

Machine Equipment Parts
ES/GL/ED Models



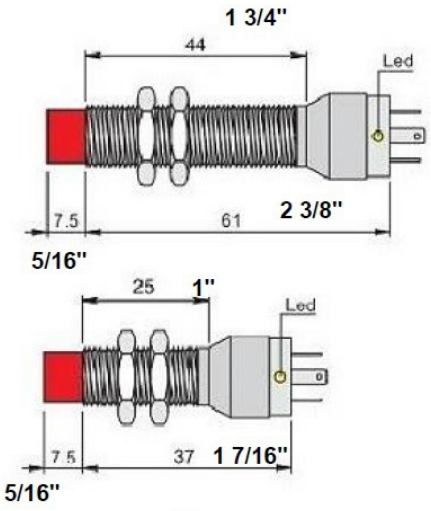



Code	Description	Ref. N.
05SI12CE4PNOK	Positioning proximity for carriage	4
05SI12NE4KT90	Blade/Chuck counter proximity	5

« E » before 2012



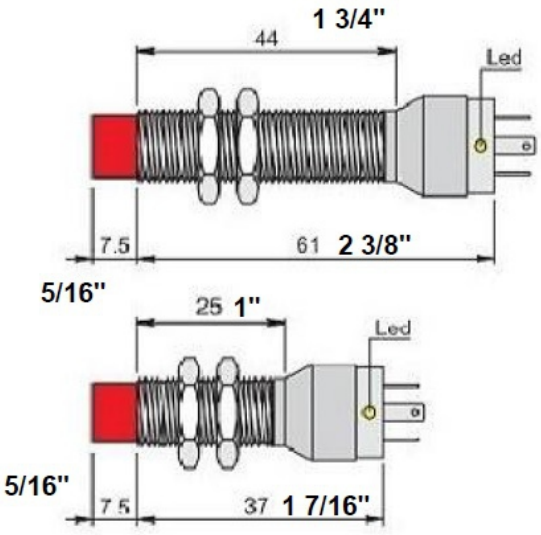



Code	Description	Ref. N.
05SI12CE4PNOK	Positioning proximity for carriage Chuck counter proximity	4
05SI12CE4-KS100	Blade counter proximity	6

** Send Machine serial numer with the order.*

Machine Equipment Parts

Safety Equipment

This magnetic device, which clamps to the cleaned blade allowing the operator to have control over the blade movement and positioning on the machine, ensures safe working and the safety of others around the operator. CMC CEVENINI recommends using a clamping device with/in combination a steel reinforced gloves (gloves are available from CMC CEVENINI or from most fastening retailers).



Code	Description
11MAGNETEMD20	Magnetic device for blades handling

Safety Gloves

Kevlar reinforced gloves for blades handling

Code	Description
GUANTIXLAME	Kevlar reinforced gloves for blades handling





Machine Equipment Parts

Ultrasonic sensor

This device allows the machine to read automatically the log diameter.



Code	Description
05ULTRAS-03	Ultrasonic sensor

Automatic zero blade

Device for "0" blade.



Code	Description
05SENSOPART-03	Device for "0" blade (30mm)
05SENSOPART-08	Device for "0" blade (50mm)

Laser pointer for blade positioning on log

Laser pointer.





Code	Description
05PUNTATORE-04	Laser pointer (CROSS LASER)
05PUNTATORE-06	Laser pointer (LINE LASER)

Automatic blade lubrification

The blade lubrication can be adjusted automatically entering the blade lubricant flow intensity into the panel.



Code	Description
08BETE-01	Electric hydropulse
08BETE-NOZZLE-0.23	FLat fan nozzle
11GALLEGG-03	Float immersion

Machine Equipment Parts

Spray Nozzles

Sprayers are used in conjunction with CMC CEVENINI specially developed slitting lubricant to cool and lubricate CMC CEVENI blades when slitting PSAT products.
Each nozzle emits an air/mist with adjustable flow rate to spr the correct amount and ensure slit quality is maintained.



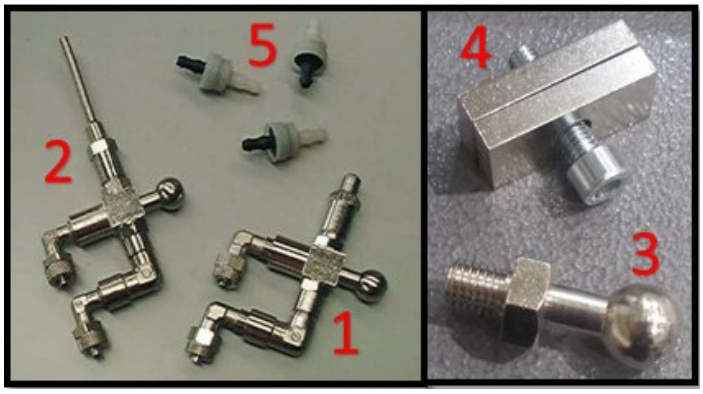

Code	Description	Ref. N.
08POLDORUNIV	Dorsa Universal Sprayer	1
08POLDORT4-8	Sprayer for ET4 – ET8	2
08PERNOPOLV	Holding sprayer support	3
08PIASTRAPOLV	Plate to hold sprayer	4
10VALVARIT	Non-return valve for lubricant	5
11GALLEGG-01	Float immersion	6

Air Chamber

CMC Cevenini is able to supply the air chambers which are necessary for the expanding mandrels used on the log slitting machines.
There are two types of air chambers: the first one for the total expanding mandrel used for the saw blade cutting system and the second one for the rotating mandrel which has 100mm. expanding section near the chuck used for the standard blade cutting system.
Both air chambers are fitted with the necessary inflation valves.









Code	Description	Ref. N.
08KITMR300.7	Air chamber for total expanding mandrel (used for saw blade cutting system) fitted with its inflation valve. Air chamber length:2000mm	1
08KITMR300.10A	Air chamber for total rotating mandrel with 3 strips which has 100mm expanding section near the chuck (used for standard blade cutting system) fitted with its inflation valve. Air chamber length:180mm.	2
08VALVOLANPT	Inflation Valve type NPT.	3
08KITMR300.244-C	Air chamber for total rotating mandrel with 6 strips which has 100 mm expanding section near the chuck (used for standard blade cutting system) fitted with its inflation valve. Air chamber length: 165 mm.	4

Discounts are available for bulk orders. For any further information please call or contact **CMC CEVENINI Customer Service.**

CONVERTING MACHINERY CEVENINI

www.cmccevenini.com

FOR ANY FURTHER QUESTIONS
PLEASE CONTACT ONE OF OUR
TECHNICAL SERVICE DEPARTMENTS

Converting Machinery Cevenini Srl.
Via del Lavoro 18
20863 Concorezzo (MB) – ITALY
Tel. +39 0396042569
info@cmccevenini.it

CMC Cevenini USA LLC
7602 ENERGY PARKWAY, SUITE 4
CURTIS BAY, MD 21226
PHONE (443) 817-2767
FAX (443) 817-2651
info@cmcceveniniusa.com

CMC Cevenini UK
87 Alston Drive
Bradwell Abbrey, Milton Keynes
Buckinghamshire MK13 9HF - UK
Tel. +44 01908 615508
info@cmccevenini.co.uk