ALWAYS AHEAD IN INNOVATION

Converting Machinery Cevenini Srl.
Via del lavoro, 18 - 20863 CONCOREZZO (MB) ITALIA
Tel +39/039/6042569 - Fax +39/039/6042606
info@cmccevenini.it - www.cmccevenini.com

Automatic Log Slitter Mod. E450 (XYZ)



Technical Features

- Fully automatic working cycle with the exception of loading and unloading of the material.
- Working width: 1700mm. (67").
- Max. weight of material loadable on unsupported mandrel: 80 kg (176.5 lbs); with supported mandrel , 200 kg (441 lbs).
- Indexing tolerance: +/- 0,1mm. (0,003").
- Cutting width: from 2mm. width decimal increasing (from 0,08"with thousandths increasing).
- Cutting system: single rotating blade (bevel blade or saw blade) on one mandrel.
- Kit for saw blade cutting transmission, with pulleys and belts included. Saw cutting: Max. O.D. of the log: 400m. (15.7") on a Ø 76mm (3") or Ø 152mm (6") fully expansion mandrel with Ø max. 450mm. (17,7") saw blade. (only in the "F" Machines)
- Driven and Free blade unit.
- Machine controlled by a PLC "SIEMENS"and interface operator "TP700" with touch screen technology for all the working functions and display for the cutting widths pre-selection, production counter, rotation speed of the log and of the blade.
- Programming panel located on a swivel arm for great display of the pre-selected working data.
- Automatic check-control on the machine working functions, with self-diagnosis messages.
- Automatic blade pivoting angle (except only saw blades.)
- Total safety protection guard with sliding doors, complying with the "EC" requirements in force (sound proof only saw blade).
- Flip safety guard to protect the operator when main shield is opened. (except only saw blade).
- Ability to select 2 different cutting widths per logroll.
- Proportional valve to adjust 3 penetration speeds of the blade into the material using a linear transducer.
- Accurate setting of the blade stroke, depending on the outside Ø of the log and inside Ø of the core.
- Log and blade rotation speeds adjustable on a continuous scale.
- Front side machine backwater tank, blade cover, blade shaft and flange made of stainless-steel.
- Lubricating and cooling system of the blade by spray of air/lubricant mixture.
- Automatic blade sharpening unit with de-burring assembly, programmable in frequency and time.(except only saw blade)
- Fast speed blade carriage index by means of a brushless motor.
- Internet remote-service assistance with link to CMC CEVENINI for on-line software up-date and fault finding.

Options

- Ability to cut up to 4/8 different widths on the same log.
- Laser pointer to easy allow the manual positioning of the blade (except with loading/unloading trolley hydraulically operated.)
- Acoustic alarm for the minimum level of the emulsion tank for lubricating system.
- Automatic "0" blade tip detection at every cutting cycle or after a hold (except only saw blade).
- Possibility to store numberless working pages.
- Automatic detection of log diameter.
- Support rest for the mandrel automatically operated.
- Additional chilled air cooling system for blade (Vortex).
- Blade cleaning device.
- Loading/Unloading helping devices.
- This model can be customized to meet customer's needs thanks to a wide range of options available.

Cevenini USA LLC
7602 Energy Parkway, Suite 2
Curtis Bay, MD 21226
Tel +1/443/817/2767 - Fax +1/443/817/2651
info@cmcceveniniusa.com - www.cmccevenini.com

Cevenini UK
87, Priory Court - Alston Drive
BradwellAbbey - Milton Keynes MK13 9HF
Tel +44/01908/615508 - Fax +44/01908/615509
info@cmccevenini.co.uk - www.cmccevenini.com

Converting Machinery Cevenini Srl.
Via del lavoro, 18 - 20863 CONCOREZZO (MB) ITALIA
Tel +39/039/6042569 - Fax +39/039/6042606
info@cmccevenini.it - www.cmccevenini.com

ALWAYS AHEAD IN INNOVATION

Automatic Log Slitter Mod. E450 (XYZ)

E 450

- HEAD
  - No Disk or Jaw Chucks with Plateau
    
  - Disk + Expansion
    - Max. O.D. 285mm (11.2")
      
  - STANDARD Jaw Chucks with Plateau+ (Pins)+ Expansion
    - Max. O.D. 430mm(16.9")
      
- MANDREL TAIL STOCK SUPPORT
  - MANUAL
    
  - AUTOMATIC
    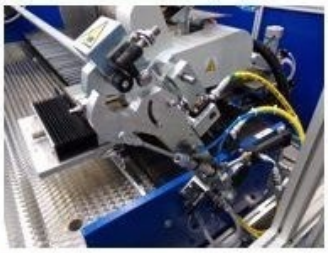
- BLADE
  - BEVEL BLADE (L)
    
  - SAW BLADE (F)
    
- LOADING/ UNLOADING
  - MANUAL
  - TROLLEY (S)
    
    Max. log weight on trolley (S) 200 kg. (441 lbs.)
  - SWIVEL POLES (A)
    
    Max. log weight on each pole (A) 80 kg. (176,4 lbs.)

Max. log weight on unsupported mandrel 80 kg. (176,4 lbs.)

Max. log weight on supported mandrel 200 kg. (441 lbs.)

Cevenini USA LLC
7602 Energy Parkway, Suite 2
Curtis Bay, MD 21226
Tel +1/443/817/2767 - Fax +1/443/817/2651
info@cmcceveniniusa.com - www.cmccevenini.com

Cevenini UK
87, Priory Court - Alston Drive
BradwellAbbey - Milton Keynes MK13 9HF
Tel +44/01908/615508 - Fax +44/01908/615509
info@cmccevenini.co.uk - www.cmccevenini.com

Converting Machinery Cevenini Srl.
Via del lavoro, 18 - 20863 CONCOREZZO (MB) ITALIA
Tel +39/039/6042569 - Fax +39/039/6042606
info@cmccevenini.it - www.cmccevenini.com

ALWAYS AHEAD IN INNOVATION

Automatic Log Slitter Mod. E450 (XYZ)

FOR PROTECTIVE FILM OR OTHER MATERIALS

	LOG OD<285mm(11.2")	285mm(11.2")< LOG OD<430mm(16.9")
Roll cutting width < 150mm	P	L
Roll cutting width > 150mm	PF	LF

E450 (XYZ) LOGS-MANDREL-BLADES

MACHINE	MAX OD LOG/ MAX OD Blade (L)	OD MANDRELS	MAX OD LOG / MAX OD Saw Blade(F) KIT SAW BLADE	HEAD	MANDREL TAIL STOCK SUPPORT
E450 L	430mm(16.9")/ 500mm(19.7")**	25mm(1") / 76mm(3") 152mm(6")	N/A	STANDARD	STANDARD
E450 LF	430mm(16.9")/ 500mm(19.7")**	25mm(1") / 76mm(3") 152mm(6")	400mm(15.7")/ 450mm(17.7")	STANDARD	STANDARD
E450 P	285mm(11.2")/ 400mm(15.7")*	25mm(1") / 76mm(3") 152mm(6")	N/A	DISK + EXPANSION	HEAVY
E450 PF	285mm(11.2")/ 400mm(15.7")*	76mm(3") 152mm(6")	400mm(15.7")/ 450mm(17.7")	DISK + EXPANSION	HEAVY
E450 F	N/A	76mm(3") 152mm(6")	400mm(15.7")/ 450mm(17.7")	N/A	STANDARD
E450 (XYZ)+S	+ MATERIAL LOADING/UNLOADING TROLLEY				AUTOMATIC
E450 (XYZ)+A	+ MATERIAL LOADING/UNLOADING SWIVEL POLES				HEAVY

MAIN MATERIALS CUT BY THE CMC CEVENINI E450 MACHINES

(*)PROTECTIVE FILM;
(**)FOAM, NON WOVEN, TEXTILE, P.S.A. TAPES,
(***) ROOF PROFING MATERIAL OR SIMILAR.

Cevenini USA LLC
7602 Energy Parkway, Suite 2
Curtis Bay, MD 21226
Tel +1/443/817/2767 - Fax +1/443/817/2651
info@cmcceveniniusa.com - www.cmccevenini.com

Cevenini UK
87, Priory Court - Alston Drive
BradwellAbbey - Milton Keynes MK13 9HF
Tel +44/01908/615508 - Fax +44/01908/615509
info@cmccevenini.co.uk - www.cmccevenini.com

Converting Machinery Cevenini Srl.
Via del lavoro, 18 - 20863 CONCOREZZO (MB) ITALIA
Tel +39/039/6042569 - Fax +39/039/6042606
info@cmccevenini.it - www.cmccevenini.com

ALWAYS AHEAD IN INNOVATION

Automatic Log Slitter Mod. E450 (XYZ)

Top and front view mod. E450 (XYZ) STANDARD

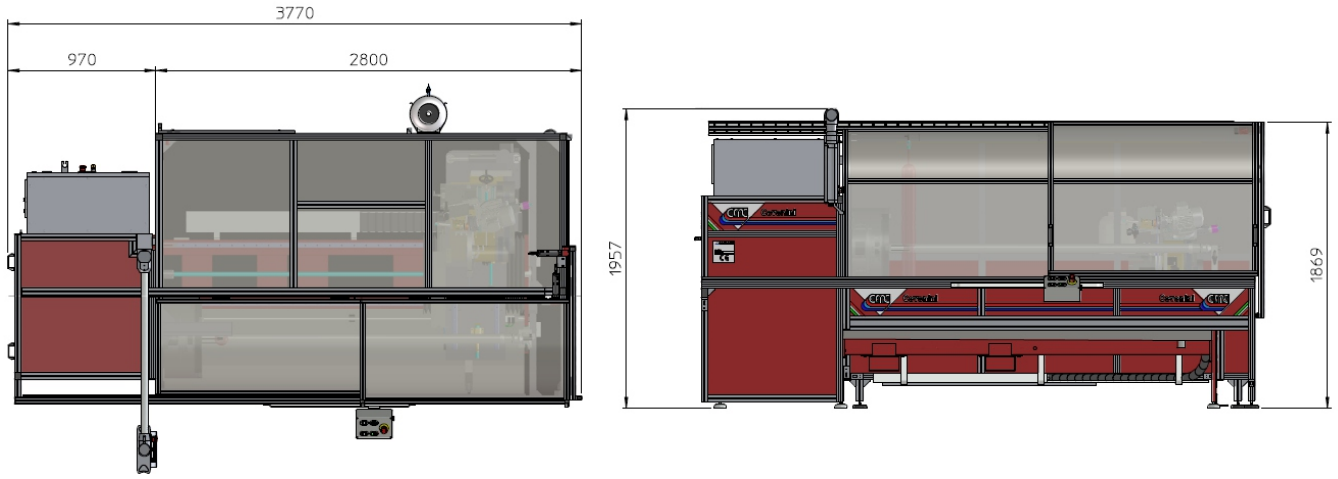

Top and front view mod. E450 (XYZ) + S

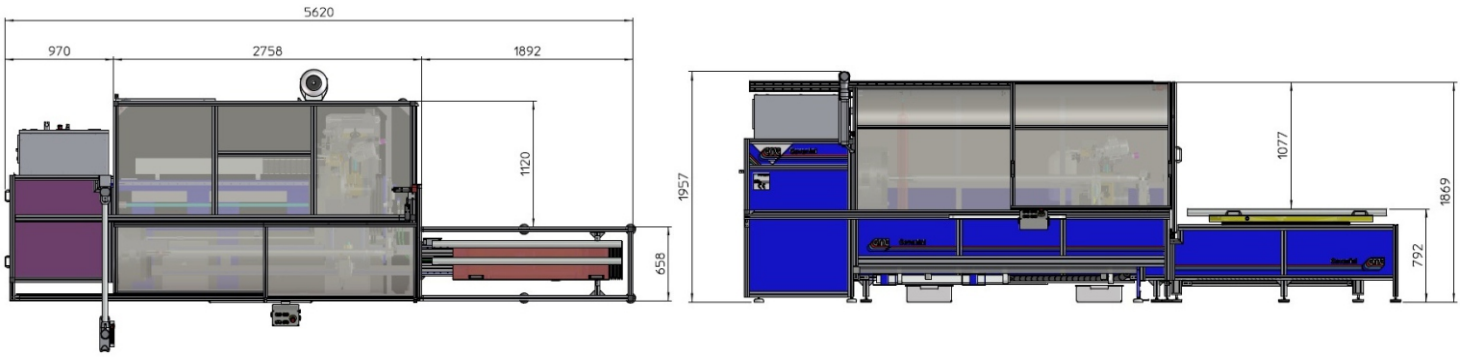

Top and front view mod. E450 (XYZ) + A

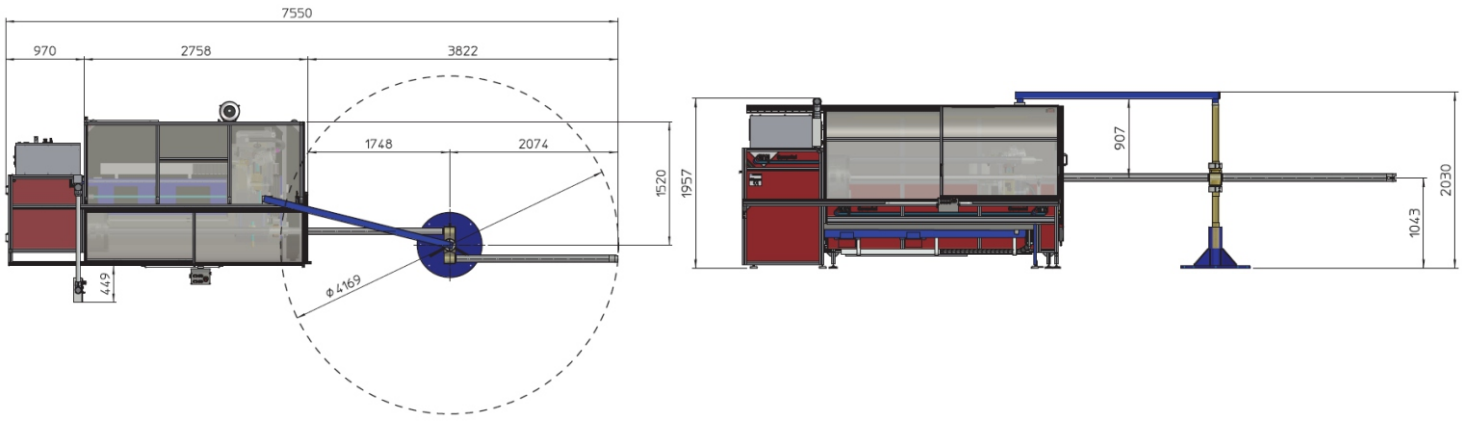

Cevenini USA LLC
7602 Energy Parkway, Suite 2
Curtis Bay, MD 21226
Tel +1/443/817/2767 - Fax +1/443/817/2651
info@cmcceveniniusa.com - www.cmccevenini.com

Cevenini UK
87, Priory Court - Alston Drive
BradwellAbbey - Milton Keynes MK13 9HF
Tel +44/01908/615508 - Fax +44/01908/615509
info@cmccevenini.co.uk - www.cmccevenini.com